Operator manual

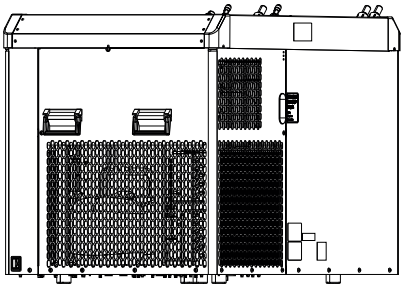

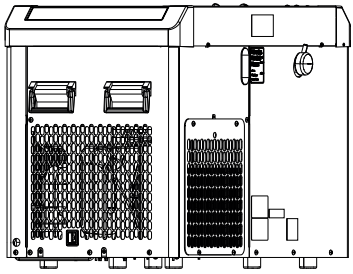

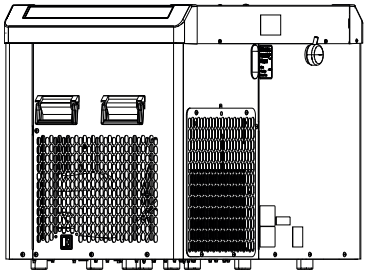

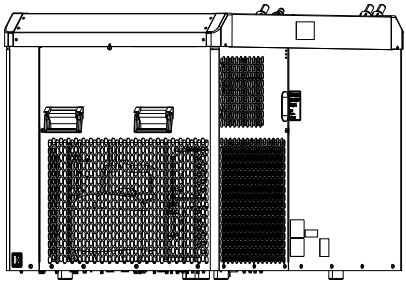

Undercounter cooler

Energize 3-5 (R134a)

Legal notice

Operator manual (Original)

Document no.: TD1005000

Undercounter cooler
Energize 3 (R134a): Unit ID no.: 221001300... | 221001302... | 221001305...
Energize 4 (R134a): Unit ID no.: 221001400... | 221001402... | 221001404...
Energize 5 (R134a) single: Unit ID no.: 221002500... | 221002510... | 221002520...
Energize 5 (R134a) dual: Unit ID no.: 221002501... | 221002507... | 221002521...

Energize 3-5 (R134a)

Version
Date of issue: 08/10/2019
Revision status: Index 3

Protection notices (in accordance with DIN ISO 16016:2017-08)
The reproduction, distribution and utilisation of this document as well as the communication of its contents is prohibited, unless expressly permitted. Violations shall result in an obligation to pay damages. All rights reserved with regard to filing for/registering patents, utility models or design patents.

Obligation to preserve records
Please keep this Operator Manual and the Declaration of Conformity in a safe place and transfer them to the subsequent owner/operator if the unit is transferred or sold.
If you lose the Operator Manual or the Declaration of Conformity, you can download them from the website below or request a printed copy from the address below.

www.cornelius-emea.com Cornelius Deutschland GmbH
Carl-Leverkus-Str. 15
40764 Langenfeld
Germany
Tel.: +49 (0) 21 73 / 79 3 – 0
Fax: +49 (0) 21 73 / 77 4 – 38
E-Mail: info@cornelius.com

Operator manual
Undercounter cooler
Table of contents

1	**Safety**	**3**
1.1	Intended use	3
1.2	Improper use	4
1.3	Staff	5
1.3.1	Operator	5
1.3.2	User	5
1.3.3	Expert	5
1.4	Presentation of warnings	6
1.5	Safety information	7
1.5.1	Disclaimer of liability and warranties	7
1.5.2	Safety information to prevent personal injury and equipment damage	8
2	**Handling the Unit Prior to Installation**	**10**
2.1	Unpacking the unit	10
2.2	Storage	11
2.3	Disposal	12
3	**Description**	**13**
3.1	Assemblies and components	13
3.1.1	Undercounter cooler Energize 3 (R134a)	13
3.1.2	Undercounter cooler Energize 4 (R134a)	14
3.1.3	Undercounter cooler Energize 5 (R134a) single	15
3.1.4	Undercounter cooler Energize 5 (R134a) dual	16
3.2	Functions within the dispensing system	17
3.3	Technical data	18
3.3.1	Undercounter cooler Energize 3 (R134a)	18
3.3.2	Undercounter cooler Energize 4 (R134a)	19
3.3.3	Undercounter cooler Energize 5 (R134a) single/Energize 5 (R134a) dual	20
3.3.4	Connections	20
3.3.5	Labelling positions	21
3.3.5.1	Undercounter cooler Energize 3 (R134a)	21
3.3.5.2	Undercounter cooler Energize 4 (R134a)	21
3.3.5.3	Undercounter cooler Energize 5 (R134a) single/Energize 5 (R134a) dual	21
3.3.6	CO_2 working pressures	22
3.3.7	Control and indicator panel	22

4 Operation **23**
4.1 Commissioning 23
4.2 Changing product containers 25
4.3 Shutdown 26

5 Maintenance **27**
5.1 Maintenance table 27
5.2 Visually inspecting the unit 28
5.3 Cleaning the unit 29

6 Errors and malfunctions **30**
6.1 Troubleshooting table 30

7 Applicable documents **33**
7.1 Declaration of conformity 33
7.2 Handover certificate 34

1 Safety

1.1 Intended use

By using the unit as intended you will not only protect yourself, but also prevent damage occurring to the unit and its components!
The intended use of undercounter coolers from the Energize 3-5 (R134a) series (referred to as “unit” in the following) is to refrigerate and convey non-alcoholic beverages and their basic ingredients. CO_2 or electric pumps are used as conveying equipment for the brands.
The unit is only suitable for stationary installation in a closed room. Stationary installation is to be carried out by an expert in compliance with all of the specifications given in the installation and service manual; see the document “Undercounter cooler installation and service manual”, document no. TD1005100.
The unit may only be operated in locations and ambient conditions which meet all of the requirements of an installation location; see the document “Undercounter cooler installation and service manual”, document no. TD1005100.
In particular, intended use means that you will carry out all activities with and on the unit to the specifications provided in this document.
This unit is only to be operated by those who meet the requirements set out in this document; see chapter 1.3.2.
Work on the unit and its components not included in the activities described in this document may only be performed by experts; see chapter 1.3.3.

1.2 Improper use

Improper use of the unit and unauthorised modifications to the unit and its components may cause personal injury and equipment damage for which Cornelius Deutschland GmbH shall assume no liability. Improper use of the unit is prohibited.
The following in particular is regarded as improper use:

- Mobile operation of unit
- Use by persons (including children) with physical, sensory or mental disabilities or those with insufficient experience and knowledge, unless they are supervised by a person responsible for their safety, or this person has instructed them in the use of the unit.
- Use, operation and maintenance by children under 8 years.
- Children are not to play with the unit. Cleaning and maintenance work must not be carried out by children unattended.
- Use by those under the influence of medication, alcohol, drugs or other substances which impair their physical, sensory or mental abilities.
- The refrigeration of non-specified liquids and those above the maximum supply temperatures as this may cause unacceptably high pressures to build up in the refrigeration circuit; see chapter 1.1.
- Operating the unit below the minimum and above the maximum ambient temperatures (minimum and maximum temperatures; see chapter 3.3).
- Operating the unit with conveying media other than those defined in this document; see chapter 1.1.
- Operating the unit in locations and ambient conditions which do not fully meet the requirements of the installation and service manual; see the document “Undercounter cooler installation and service manual”, document no. TD1005100.
- Operation of the unit by untrained staff.
- Carrying out cleaning and other types of maintenance work on the unit which contradict this document or are not included in it.

1.3 Staff

1.3.1 Operator

The operator is the natural or legal person who uses the unit or on whose behalf the unit is used. The operator must ensure that the unit is only used as intended, in observance of the safety instructions set out in this document.
The operator must ensure that all users read and understand the safety information. The operator is responsible for the planning and proper implementation of regular safety inspections and maintenance work.
With regard to operating the unit, Cornelius Deutschland GmbH recommends observing the national regulations of the country of use which govern the operation of beverage-dispensing systems.

1.3.2 User

The operator specifies who will operate this unit. Cornelius recommends the following:

– If this unit is only to be operated by employees, they are to be instructed in its use, demonstrate their abilities to use it to the operator or their authorised representative, and be expressly charged with its use. This document is to be available to staff at all times.
– If this unit is openly accessible and set up so that untrained staff can use it, the operator is to provide instructions for use directly at the unit; these must be clearly understood by this group of people, therefore ensuring that the unit will be handled safely.

1.3.3 Expert

An expert in terms of this document refers to someone who has the relevant training, experience and information and knowledge of relevant standards, laws, regulations, accident prevention regulations, generally accepted safety-related regulations and operating conditions to be able to perform the required activities as well as recognise potential risks and avert them. For assignments requiring expert knowledge, e.g. in electrical engineering, mechanics or fluid technology, only skilled workers with the right qualifications are to carry these out.
An expert must also have received technical training in the unit-specific special features of Cornelius products. The assigned tasks are always to be carried out in compliance with the relevant installation and service manual for the unit concerned; see the document “Undercounter cooler installation and service manual”, document no. TD1005100.

1.4 Presentation of warnings

The classification of warnings is based on ISO 3864-2 and ANSI Z535.6, using the key terms of[1]

– “Danger”, “Warning” and “Caution” in the case of personal injury,
– “Attention” in the case of equipment damage and
– “Notice” to impart general information.

This document classifies and presents the various pieces of safety information as follows:

DANGER!
marks a danger with a **high risk**[2] which results in serious injuries or death if not avoided.

WARNING!
marks a danger with a **medium risk**[2], which may result in serious injury or death if not avoided.

CAUTION!
marks a danger with a **low risk**[2], which may result in minor to moderate injury if not avoided.

ATTENTION!
marks a potentially damaging situation in which the product or objects may be damaged if not avoided.

NOTICE!
marks tips for use and other particularly useful information that may not be recognised at first glance.

SAFETY INFORMATION!
marks safety information which must be observed in the stated operating situation.

[1] Not every one of following key terms is necessarily used in this documentation.

[2] Risk = extent x likelihood of occurrence

1.5 Safety information

Any work on the unit and its components which goes beyond the operation and servicing and maintenance that the operator is authorised for, may only be performed by **experts** (for a definition of experts, see chapter 1.3.3). Furthermore, it is crucial that when performing work on the unit all safety information is observed; this information is set out in the following sections. Some of the tasks may have additional safety information which highlights the specific dangers or hazards associated with such work.

1.5.1 Disclaimer of liability and warranties

If work is undertaken on the unit which is not described in this document, Cornelius Deutschland GmbH shall not assume any liability for any resulting hazards and damages. The same applies to described work which is partly or not fully performed in compliance with the regulations set out in this document.

WARNING!

Risk of personal injury and equipment damage due to improperly executed work!

Improperly executed work at the unit will cause dangers to persons and damage to the unit.

- Have all work at the unit carried out by Cornelius Deutschland GmbH or by a service partner.

WARNING!

Risk of personal injury and equipment damage due to the use of non-approved spare parts and accessories!

Using spare parts and accessories that are not recommended by the manufacturer may lead to personal injury and equipment damage.

- For your own safety and to protect your warranty, only use original spare parts.

1.5.2 Safety information to prevent personal injury and equipment damage

Please always observe the following safety information in order to prevent personal injury occurring:

DANGER!

Risk of death from electric shock!
Touching live electrical parts will result in a risk of electric shock!
- Do not carry out any work on the electrical system.

WARNING!

Risk of burns when touching hot parts of the unit!
Touching parts of the unit after it has been in continuous use over an extended period of time will result in a risk of burns.
- Take appropriate safeguard measures, such as by wearing heat-resistant protective gloves.

DANGER!

Risk of poisoning and risk of explosion due to improper handling of CO_2 cylinders!
Risk of death from CO_2!
- Observe all information on occupational safety for the safe operation of dispensing systems as applicable in the relevant country of installation.

WARNING!

Risk of personal injury and equipment damage due to improper operation!
Risk of death from improper operation!
- Make sure that only users who are users as defined in the user section use the unit; see chapter 1.3.2.
- Children must be supervised to ensure that they do not play at or with the unit.

DANGER!

Risk of personal injury and equipment damage due to leaking refrigerant!

In accordance with DIN EN 378 standard, part 1, the refrigerant used with this unit, R134a (1,1,1,2-Tetrafluoroethane), is classified as safety group A1. It is not classified as dangerous according to Council Directive 67/548/EEC. The refrigerant is heavier than air and, consequently, accumulates at the bottom and may enter lower lying areas (e.g. sewage systems). At very high concentrations, it may lead to disturbances of conciousness and to a lack of oxygen. At high concentrations, it may lead to cardiac arrhythmia or sudden death. Lower concentrations may have a narcotic effect. Contact with liquid splashes or spray mist may result in cryogenic burns of skin and eyes. The refrigerant has a very slight ethereal odour.

- Avoid any damage to components that carry the refrigerant.
- If you suspect any leaks, however small, shut down the unit, air the room well and inform your service partner.
- Do not allow direct contact with the skin of any leaking refrigerant.
- Fire, open flames and smoking are prohibited.
- If you begin to notice any smell, immediately leave the room and alert the fire service.

NOTICE!

In particular, safety standards are to be observed in their scope of validity (e.g. EN 60335-2-75).

2 Handling the Unit Prior to Installation

2.1 Unpacking the unit

NOTICE!
Cornelius Deutschland GmbH is not responsible for damaged deliveries. If any damage is found, all packaging material is to be kept and the freight carrier is to be contacted. If the freight carrier is not contacted within 48 hours of receipt of delivery, the warranty claim might be rendered void.

NOTICE!
The unit is thoroughly checked ex works before being shipped. The freight carrier has confirmed and acknowledged receipt. All damage or irregularities are to be noted at the time of delivery and reported immediately to the freight carrier delivering. Please request a written inspection report from the claims inspector to substantiate any claim.

1. Inspect the cardboard box and make a note of any damage however minimal this may seem. If the cardboard box is damaged, please make a note of the following on the copy of your freight invoice: “exterior cardboard box damage – concealed damage possible”. Please contact the freight company immediately.
2. Open the cardboard box, packaging material and plastic bag in which the unit is packed. Check the unit thoroughly for damage and to make sure it is complete in accordance with table 2-1.
3. Remove the packaging material from the top of the unit.
4. Check the unit housing and make sure that there are no scratches, dents or other superficial defects.
5. Make sure that the glass or plastic has no scratches or cracks.
6. Open the package with the loose individual parts and check all parts for damage and completeness. Check that the received parts correspond with the packing list and make sure that you have received all parts.

NOTICE!
Do not put the unit down on its front or sides without the packaging as this may damage the housing. This will render the warranty claim void.

No.	Description	Qty/amount
1	Operator manual	1
2	Installation and service manual or information sheet on installation and service manual	1
3	Undercounter cooler	1
4	Mains power cable	1

Tab. 2-1 Cardboard box content

2.2 Storage

Avoid excessive temperature fluctuations as condensate may form, which in turn may cause damage to the unit or to the components.
The permissible storage temperature is -10 °C to +50 °C.
The acclimatisation period is 6 hours.

ATTENTION!

Damage due to improper storage!
Dirt or moisture entering a unit, as well as certain weather conditions (e.g. condensate forming in the unit, sunlight) will cause damage to the unit and its components.

- Protect the unit and its components by storing the unit in a clean and dry place, and by ensuring stable ambient conditions.
- If possible, store the unit in its original packaging. Unpacked units must be covered with a dustproof cover. No condensate must form under the cover.

ATTENTION!

Risk of electrostatic charge!
Improper handling or storage may result in electrostatic charges.

- If possible, store units and/or any electronic components in their original packaging.
- Keep units and/or electronic components away from charged objects, fields and insulators.
- Avoid electrostatic charges when removing packaging and/or handling electronic assemblies and components by working at an ESD-protected workstation or work area.
- When working at the unit or its components, wear a grounding (antistatic) wrist strap at the very least and wear antistatic gloves if necessary.

ATTENTION!

Component damage due to material ageing!
Material can age due to long storage periods, thereby affecting the material's properties (e.g. plastics and seals may become brittle). The properties of lubricants may change due to long storage periods.

- Check the assemblies and components for damage before each use/ before installing them. Do not install assemblies or components that show visible signs of ageing.

ATTENTION!

Component damage due to freezing liquids!
Ambient temperatures that are below freezing will lead to the freezing of any water or cleaning agent residue remaining inside the unit. This will lead to damage to internal components.

- Before shipment, storage or relocation of the unit, the unit is to be cleaned and the cleaning solution is to be fully drained from the unit.

2.3 Disposal

Disposal of the units must be carried out in compliance with the applicable local and/or national and international regulations. Units must not be disposed of with household waste.
If the unit contains fuels or lubricants in liquid, paste-like or gaseous form, such as oil, grease, cooling agents etc., such fuels or lubricants are to be collected using appropriate measures and disposed of in compliance with the applicable local and/or national and international regulations. Such fuels or lubricants must always be prevented from seeping into the ground, the sewage system and any bodies of water, and must always be prevented from entering the atmosphere.

3 Description

3.1 Assemblies and components

3.1.1 Undercounter cooler Energize 3 (R134a)

The unit comprises the following assemblies:

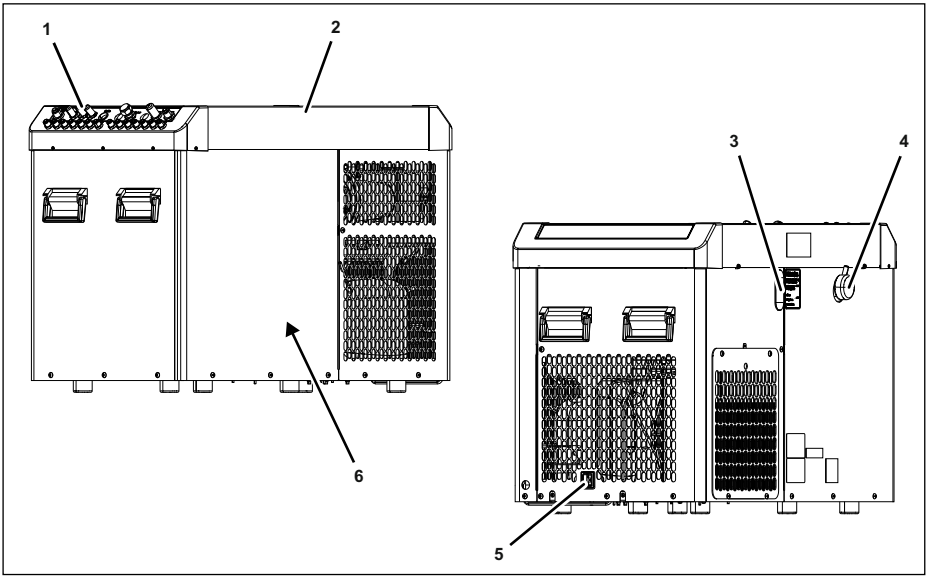

Fig. 1

1 Tube connections
2 Cover
3 Control and indicator panel
4 Water level gauge
5 Line supply
6 Cooling unit with refrigerator and carbonator

3.1.2 Undercounter cooler Energize 4 (R134a)

The unit comprises the following assemblies:

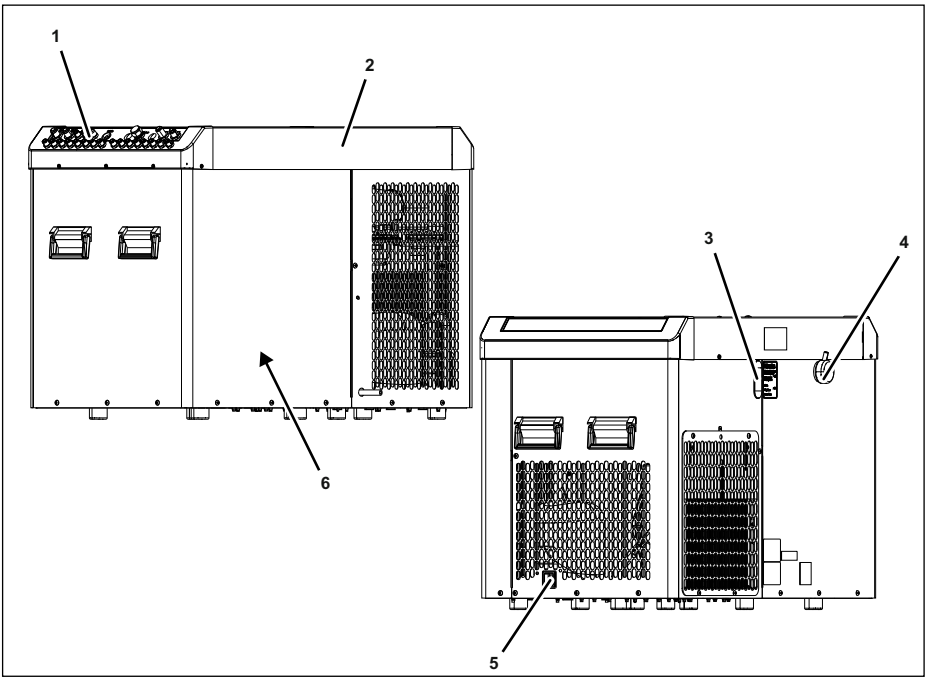

Fig. 2

1 Tube connections
2 Cover
3 Control and indicator panel
4 Water level gauge
5 Line supply
6 Cooling unit with refrigerator and carbonator

3.1.3 Undercounter cooler Energize 5 (R134a) single

The unit comprises the following assemblies:

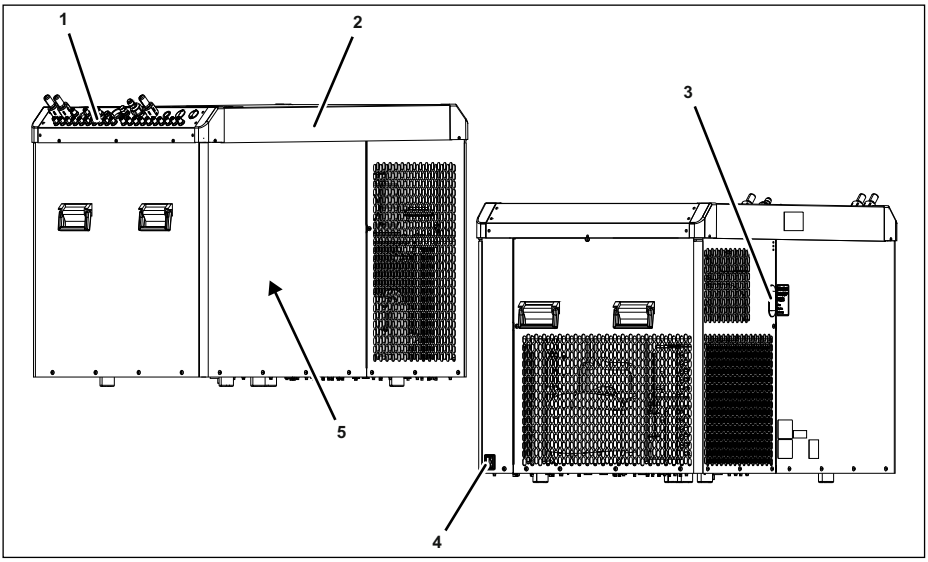

Fig. 3

1 Tube connections
2 Cover
3 Control and indicator panel
4 Line supply
5 Cooling unit with refrigerator and carbonator

3.1.4 Undercounter cooler Energize 5 (R134a) dual

The unit comprises the following assemblies:

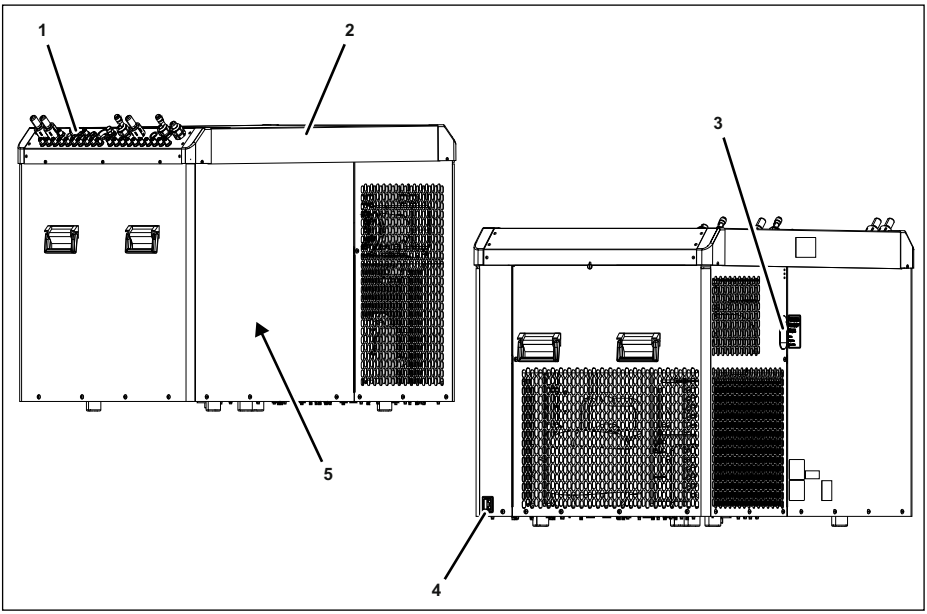

Fig. 4

1 Tube connections
2 Cover
3 Control and indicator panel
4 Line supply
5 Cooling unit with refrigerator and carbonator

3.2 Functions within the dispensing system

The unit refrigerates and conveys non-alcoholic drinks from the storage section of the dispensing system to the tower on the counter. The pressure-reduced, filtered water, syrup, and CO_2 required is supplied as illustrated in the flowchart (Fig. 5).

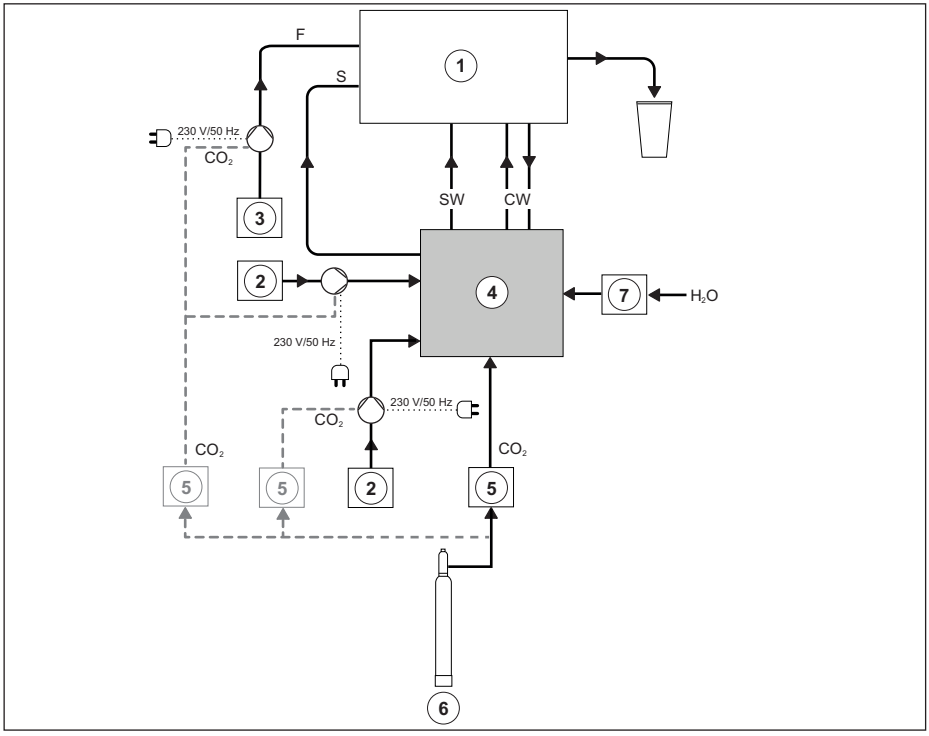

Fig. 5

1 Tower
2 Syrup/BIB
3 Flavour shot (optional)
4 Undercounter cooler
5 Pressure-reducing valve
6 CO_2
7 Water filter (optional)

S = syrup
SW = still water
CW = carbonated water
H_2O = tap water
F = Flavour

The beverage components are chilled to the right temperature in the housing. Drinking water is also carbonated. This means that still water, soda and chilled syrup are available at the refrigerator outlets for postmix beverages.
When requested at the tower, they are conveyed to the tower via the python. Only the soda is continuously circulated.
CO_2 or electrically operated syrup pumps are used to convey the brands (syrup).

Apart from the daily check and the connection of new syrup containers and BIBs as and if needed (see chapter 4.2), the undercounter cooler requires no operation by the user or operator.

3.3 Technical data

3.3.1 Undercounter cooler Energize 3 (R134a)

Description	Parameter	Value	Unit
Dimensions	Height	605/23.8	mm/in.
	Width	850/33.5	mm/in.
	Depth	470/18.5	mm/in.
Dispensing capacity	At a dispensing rate of 2 drinks of 0.3 litres a minute[1]	360 at 2/min	Unit
Ice build-up size	Weight	18	kg
Ice build-up capacity		1440	kcal/h
Power supply	Supply voltage	230	V
	Frequency	50	Hz
Power input	max.	1200	W
Current consumption	max.	5.8	A
Python length	max.	15	m
Syrup (optional)	Quantity	6	Unit
Premix (optional)	Quantity	2	Unit
Still water (optional)	Quantity	1	Unit
Shipping weight		80	kg

1. with 15 m SC python

3.3.2 Undercounter cooler Energize 4 (R134a)

Description	Parameter	Value	Unit
Dimensions	Height	660/26	mm/in.
	Width	950/37.4	mm/in.
	Depth	515/20.3	mm/in.
Dispensing capacity	At a dispensing rate of 2 drinks of 0.3 litres a minute[1]	700 at 2/min	Unit
Ice build-up size	Weight	30	kg
Ice build-up capacity		2400	kcal/h
Power supply	Supply voltage	230	V
	Frequency	50	Hz
Power input	max.	1700	W
Current consumption	max.	9	A
Python length	max.	30	m
Syrup (optional)	Quantity	8	Unit
Premix (optional)	Quantity	2	Unit
Still water (optional)	Quantity	1	Unit
Shipping weight		110	kg

1. with 30 m SC python

3.3.3 Undercounter cooler Energize 5 (R134a) single/ Energize 5 (R134a) dual

Description	Parameter	Value	Unit
Dimensions	Height	810/31.9	mm/in.
	Width	1080/42.5	mm/in.
	Depth	690/27.2	mm/in.
Dispensing capacity	At a dispensing rate of 4 drinks of 0.3 litres a minute[1]	700 at 4/min	Unit
Ice build-up size	Weight	55	kg
Ice build-up capacity		4400	kcal/h
Power supply	Supply voltage	230	V
	Frequency	50	Hz
Power input	max.	2200	W
Current consumption	max.	11.5	A
Python length	max.	30	m
Syrup (optional)	Quantity	8	Unit
Premix (optional)	single	1	Unit
	dual	2	Unit
Still water (optional)	Quantity	1	Unit
Shipping weight		125	kg

1. with 30 m SC python

3.3.4 Connections

NOTICE!
The applicable installation and service manual contains the diagram and description of the connections for this unit; see the document “Undercounter cooler installation and service manual”, document no. TD1005100.

3.3.5 Labelling positions

3.3.5.1 Undercounter cooler Energize 3 (R134a)

Fig. 6/1 Dangerous voltage warning sign
Fig. 6/2 Unit type plate
Fig. 6/3 Python connection warning sign
Fig. 6/4 Refrigerant warning sign
Fig. 6/5 Carbonator type plate

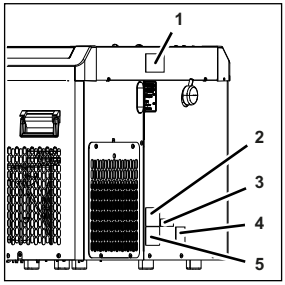

Fig. 6

3.3.5.2 Undercounter cooler Energize 4 (R134a)

Fig. 7/1 Dangerous voltage warning sign
Fig. 7/2 Unit type plate
Fig. 7/3 Python connection warning sign
Fig. 7/4 Refrigerant warning sign
Fig. 7/5 Carbonator type plate

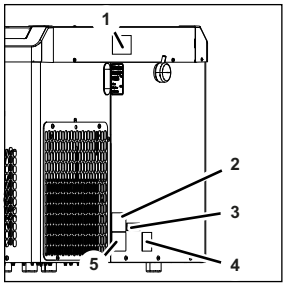

Fig. 7

3.3.5.3 Undercounter cooler Energize 5 (R134a) single/Energize 5 (R134a) dual

Fig. 8/1 Dangerous voltage warning sign
Fig. 8/2 Unit type plate
Fig. 8/3 Python connection warning sign
Fig. 8/4 Refrigerant warning sign
Fig. 8/5 Carbonator type plate

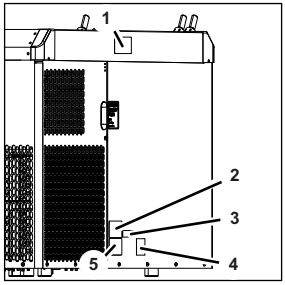

Fig. 8

3.3.6 CO_2 working pressures

Circuit	Pressure[1]	Unit
Syrup	0.35-0.45	MPa
CO_2 pressure	0.52-0.62	MPa
Light product	0.15-0.20	MPa
Soda water	0.40-0.45	MPa
Tap water flow pressure	0.20-0.30	MPa

1. Changes reserved

NOTICE!
When using Cornelius pythons, heat loss of 8-15 kcal/h is to be calculated for each consecutive metre.

3.3.7 Control and indicator panel

Fig. 9/1 Carbonator pump switch
Fig. 9/2 Circulation pump switch
Fig. 9/3 Compressor switch
Fig. 9/4 LED red - alarm
Fig. 9/5 LED orange - CO_2 alarm
Fig. 9/6 LED green - power/mains

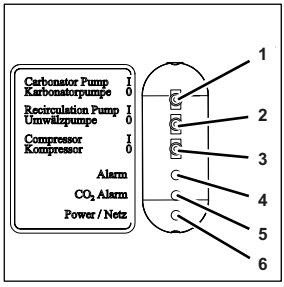

Fig. 9

LED	Status	Description	Comment
Alarm (red)	Off	OK	No existing error
	On	Not OK	see chapter 6.1
	Flashing 1 Hz	Not OK	see chapter 6.1
	Flashing 4 Hz	Not OK	see chapter 6.1
CO_2 alarm (orange)	Off	OK	CO_2 pressure is available
	On	Not OK	see chapter 6.1
Power/mains (green)	On	OK	Voltage in permitted section
	Flashing 1 Hz	Not OK	see chapter 6.1
	Flashing 4 Hz	Not OK	see chapter 6.1
Alarm (red) + power/ mains (green)	Flashing alternately	Not OK	see chapter 6.1

4 Operation

NOTICE!
The unit is set up and commissioned by the service partner. Once complete, you will receive initial instruction on how to operate and maintain the unit. The following describes the operating sequences and will help familiarise you with how the unit works.

DANGER!

Risk of personal injury and equipment damage due to non-compliance with safety information!
Failure to observe the safety information will result in a risk of bringing about operating conditions at the unit, which may cause personal injury or equipment damage.

- Please always strictly observe all safety measures and information/instructions; see chapter 1.

The unit has been designed for continuous operation. Apart from the daily check and the connection of new syrup containers and BIBs as and if needed (see chapter 4.2), the undercounter cooler requires no operation by the user or operator.

4.1 Commissioning

NOTICE!
The following describes how the operator or user can put the unit back into service following temporary shutdown (< 24 hours).
If the unit has to be put back into service after a long shutdown (> 24 hours), this may only be carried out by an expert, see chapter 1.3.3, as the unit has to be cleaned.

NOTICE!
To prevent algae building up in the water, the disinfectant Molco (PN 14-9670-150) can be added. The container size with 150 ml disinfectant is sufficient for 30 litres of water.

1. Check the water level gauge to make sure the water pan is filled up with tap water.

   Make sure the water level is between minimum and maximum.

   If necessary, fill up the water bath with tap water.

2. Check that the CO_2 bottle valve is open; see documentation on the CO_2 system.

   If necessary, open the valve on the CO_2 bottle.

3. Check the pressure-reducing valve on the CO_2 bottle to make sure CO_2 pressure for carbonation is set as specified (for the setpoint, see chapter 3.3).

4. **Only for types with CO_2-operated syrup pumps:** Check the second pressure-reducing valve on the CO_2 bottle to make sure the CO_2 pressure for pressurising the syrup pumps is set as specified (for the setpoint, see chapter 3.3).

5. Check that the CO_2 shut off valves are open; see documentation on the CO_2 system.

   If necessary, open the CO_2 shut off valves.

6. Check that the water supply valve is open; see documentation on the water supply valve.

   If necessary, open the water supply valve.

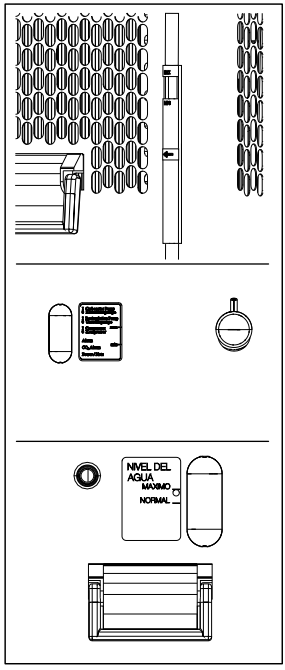

Fig. 10

7. Check the pressure-reducing valve on the water pip to make sure the water pressure is set as specified (for the setpoint, see chapter 3.3).

8. Check the fill level and the connection of the syrup containers and BIBs and replace the empty containers with full ones; see chapter 4.2.

9. Check that the tower is fully operational; see the document “Tower operator manual”.

Once the unit has been switched off and only then:

1. Plug the mains plug into the earthed socket, if applicable.

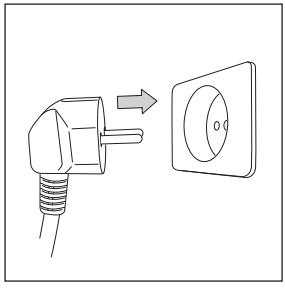

Fig. 11

2. Turn the compressor switch (Fig. 12/3) to position “I”.
3. Turn the carbonator pump switch (Fig. 12/1) to position “I”.
4. Turn the circulation pump switch (Fig. 12/2) to position “I”.

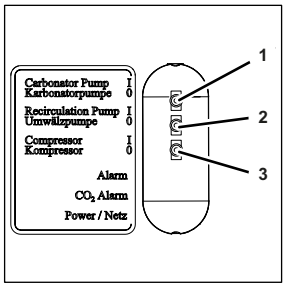

Fig. 12

NOTICE!
Only turn the circulation pump switch to position “I” once the carbonator pump is off.

4.2 Changing product containers

NOTICE!
When a product container is empty, this is indicated by soda only being dispensed at the tower when a product is selected.

1. Undo the tube connection on the product container that needs changing.
2. Exchange the empty product container for a full one and remove the protective cap from its connection.

NOTICE!
Do not mix up standard and light products as they are conveyed with different CO_2 pressures. Therefore, only standard products may be connected to tubes 1-5 and light products only to tube 6.

3. Connect the tube connection back onto the product container.

NOTICE!
If you would like to change another beverage, please inform your service partner.

4.3 Shutdown

NOTICE!
The following describes how the operator or user can temporarily shut down the unit (< 24 hours).
If the unit has to be shut down for a longer period (> 24 hours), this may only be carried out by an expert, see chapter 1.3.3, as the unit has to be cleaned and drained.

1. Close the CO_2 bottle valve; see documentation on the CO_2 system.
2. Close the CO_2 shut off valves; see documentation on the CO_2 system.
3. Close the valve of the water supply; see documentation on the water system.
4. Turn the compressor switch (Fig. 13/3) to position “0”.
5. Turn the circulation pump switch (Fig. 13/2) to position “0”.
6. Turn the carbonator pump switch (Fig. 13/1) to position “0”.

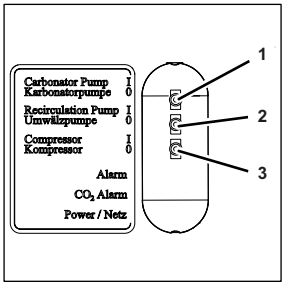

Fig. 13

7. Pull the mains plug out of the earthed socket.

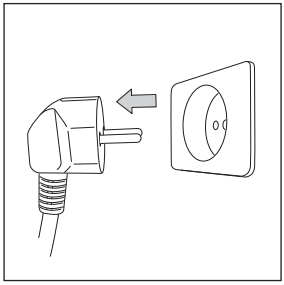

Fig. 14

5 Maintenance

DANGER!

Risk of personal injury and equipment damage due to non-compliance with safety information!
Failure to observe the safety information will result in a risk of bringing about operating conditions at the unit, which may cause personal injury or equipment damage.

- Please always strictly observe all safety measures and information/instructions; see chapter 1.

5.1 Maintenance table

NOTICE!
The following table provides information on recommended maintenance intervals to be adapted to the relevant installation situation.

Interval	Components	Action
Daily	Undercounter cooler, exterior	Perform visual inspection; see chapter 5.2
Every 3 months	Undercounter cooler, interior	Clean; see chapter 5.3
Every 3 months	Condenser fins	Clean Please contact your service partner
Every 3 months	Undercounter cooler	Clean tubes Please contact your service partner
Annually	Undercounter cooler	Change the water in the water bath. Please contact your service partner
As required	Undercounter cooler, interior	Thaw ice build-up Please contact your service partner

5.2 Visually inspecting the unit

NOTICE!
Working with a shut off water pipe means the python and the carbonator tank will be empty and therefore not dispense. The soda circuit requires careful bleeding using the carbonator tank drain valve.

1. Check the water level gauge to make sure the water pan is filled up with tap water.
   Make sure the water level is between minimum and maximum.
   If necessary, fill up the water bath with tap water.
2. Check that the CO_2 bottle valve is open; see documentation on the CO_2 system.
   If necessary, open the valve on the CO_2 bottle.
3. Check the pressure-reducing valve on the CO_2 bottle to make sure CO_2 pressure for carbonation is set as specified (for the setpoint, see chapter 3.3).
4. **Only for types with CO_2-operated syrup pumps:** Check the second pressure-reducing valve on the CO_2 bottle to make sure the CO_2 pressure for pressurising the syrup pumps is set as specified (for the setpoint, see chapter 3.3).
5. Check that the CO_2 shut off valves are open; see documentation on the CO_2 system.
   If necessary, open the CO_2 shut off valves.
6. Check that the water supply valve is open; see documentation on the water supply valve.
   If necessary, open the water supply valve.
7. Check the pressure-reducing valve on the water pip to make sure the water pressure is set as specified (for the setpoint, see chapter 3.3).
8. Check the fill level and the connection of the syrup containers and BIBs and replace the empty containers with full ones; see chapter 4.2.
9. Check the tightness of the basic ingredient/beverage tubes for any leaks. They can only be visually inspected.
   If there are any fluids leaking out, please inform your service partner.
10. Check the tightness of the CO_2 tubes by closing the valve on the CO_2 bottle.
    The initial pressure indicator on the pressure-reducing valve must not drop; if it does, inform your service partner immediately!
11. Afterwards, open the CO_2 bottle valve again.
12. Inspect the unit for damage.
    Always replace any damaged components and parts.
    Please contact your service partner.
13. Check that the supply and exhaust air grilles are clean and that there is a proper air flow.
    Dirty or blocked supply and exhaust air grilles are to be cleaned; see chapter 5.3.
14. Check the legibility of the warning signs; see chapter 3.3.5.
    Always replace any missing or illegible warning signs. Please contact your service partner.

5.3 Cleaning the unit

Required tools/materials	ID/reference	Qty/amount	Comment
Approved cleaning agent		1	
Non-abrasive cloth		1	
Paper towel		1	
Vacuum cleaner		1	

1. Use a vacuum cleaner to clean the supply and exhaust air grilles of dirt.
2. Clean the unit with a clean, damp cloth and, if necessary, an approved cleaning agent.
3. Dry the unit with a paper towel.

6 Errors and malfunctions

NOTICE!
All installation, maintenance and repair work at the unit is to be carried out by an expert only.

6.1 Troubleshooting table

Fault	Probable cause	Remedy
Unable to dispense	No mains/power supply connected	Please contact your service partner
	Transformer defective	Please contact your service partner
	Fuse defective	Please contact your service partner
Beverage is too warm and the compressor is not running	Undercounter cooler is not switched on	Start up the undercounter cooler; see chapter 4.1
	Compressor not running	Switch on the compressor; see chapter 4.1
		Please contact your service partner
Beverage is too warm and the compressor is running	Excessive beverage dispensing	Do not exceed the maximum dispensing capacity (see the document “Undercounter cooler operator manual”)
	Condenser is dirty or covered	Please contact your service partner
	Agitator motor is defective	Please contact your service partner
	Circulation pump is defective	Please contact your service partner
Beverage foams for all brands	All beverages are too warm	Check storage temperature
	CO_2 feed pressure for the soda circuit is too high on the relevant pressure-reducing valve	Adjust the CO_2 feed pressure to the required value (see documentation on the CO_2 system)
	Syrup has been stored too long and has had CO_2 added	Connect a new syrup container; see chapter 4.2
	Contaminated tubes	Please contact your service partner

Fault	Probable cause	Remedy
Only soda is being dispensed	Syrup container is empty	Connect a new syrup container; see chapter 4.2
	Connections on the syrup container are not properly connected	Connect the connections on the syrup container properly (see documentation on the syrup container)
	CO_2 feed pressure for the syrup circuit is set incorrectly on the relevant pressure-reducing valve	Adjust the CO_2 feed pressure to the required value (see documentation on the CO_2 system)
	Syrup tube is not connected to the syrup container	Connect the syrup tube; see chapter 4.2
	Syrup tube is contaminated	Please contact your service partner
	Incorrectly set valve on the tower	Please contact your service partner
	Defective valve on the tower	Please contact your service partner
	Shut-off valve or pressure-reducing valve for the fresh water supply is closed	Open the shut-off valve and pressure-reducing valve for the fresh water supply (see documentation on the drinking water system)
	Water pressure too high or too low	Check the water pressure on the pressure-reducing valve and adjust, if necessary; see chapter 4.1
Only syrup is being dispensed	Circulation pump is switched off	Switch on the circulation pump; see chapter 4.1
	Circulation pump is defective	Please contact your service partner
	Carbonator pump is switched off	Switch on the carbonator pump; see chapter 4.1
	Carbonator pump is defective	Please contact your service partner
	Water in the cooling coils is frozen	Please contact your service partner
Soda/syrup ratio is incorrect	Too little/too much soda	Please contact your service partner
	Too little/too much syrup	Please contact your service partner
	CO_2 feed pressure for the syrup circuit is set incorrectly on the relevant pressure-reducing valve	Adjust the CO_2 feed pressure to the required value (see documentation on the CO_2 system)

Fault	Probable cause	Remedy
Insufficient amount of CO_2 in the beverage	CO_2 pressure for soda is set incorrectly on the relevant pressure-reducing valve	Correctly adjust the CO_2 pressure for soda on the relevant pressure-reducing valve (see documentation on the CO_2 system)
	Air in the carbonator tank	Please contact your service partner
	CO_2 supply is contaminated	Please contact your service partner
Alarm on (red)	Time out on pump cycle; carbonator pump is blocked	Check the water pressure, see chapter 4.1
		Briefly stop operation of the undercounter cooler; see chapter 4.3
Alarm (red) flashes approx. 1x per second	Time out due to insufficient water (pressure fluctuations), carbonator pump is blocked.	Check the water pressure, see chapter 4.1
		Briefly stop operation of the undercounter cooler; see chapter 4.3
CO_2 alarm on (orange)	CO_2 pressure <0.35 MPa; carbonator pump, valves and solenoid valve deactivated	Check the CO_2 supply; see chapter 4.1
	24 V power supply to the tower is interrupted	Check the 24 V power supply, see chapter 4.1
Power/mains (green) flashes approx. 1x per second	Low voltage < 190 V, consumers are blocked	Automatic reset is performed
Power/mains (green) flashes approx. 4x per second	Overvoltage > 260 V, consumers are blocked	Automatic reset is performed
Power/mains (green) + alarm (rot) flash alternately	Carbonator system is blocked	Briefly stop operation of the undercounter cooler; see chapter 4.3
	Control system 1 defective	Please contact your service partner
	Control system 2 defective	Please contact your service partner

NOTICE!
Crushed ice in the cup may also cause decarbonisation.
When the finished beverage comes into contact with sharp-edged ice, CO_2 is released from the dispensed drink.

7 Applicable documents

7.1 Declaration of conformity

CORNELIUS
DEUTSCHLAND GmbH
Carl-Leverkus-Straße 15
D-40764 Langenfeld
T: +49 (0) 2173 793 0
F: +49 (0) 2173 77 438
www.cornelius-emea.com

EG - Konformitätserklärung

Im Sinne der EMV - Richtlinie	2014/30/EU
Maschinenrichtlinie	2006/42/EG
Druckgeräte - Richtlinie	2014/68/EU
RoHS - Richtlinie	2011/65/EU
Lebensmittelmaterial Richtlinie	1935/2004/EG

EC - Declaration of Conformity

According to EMC - Directive	2014/30/EU
Machine Directive	2006/42/EC
Pressure - Directive	2014/68/EU
RoHS - Directive	2011/65/EU
Food Contact Material Directive	1935/2004/EC

Hersteller / Manufacturer:	**CORNELIUS DEUTSCHLAND GMBH**
Gerätebeschreibung / Type of Unit:	**Soda Kreislauf Kühler / Soda Circuit Cooler**
Typenbezeichnung / Name of Unit:	**Energize 3/4/5/5D R134a**

Normen, mit denen Konformität bescheinigt wird: / Regulations under which conformity are certified

EN 55014 - 1 :2017
EN 55014 - 2 :2015
EN 61000 - 3 - 2 :2014
EN 61000 - 3 - 3 :2013
EN 60335 - 1 : 2012 + A11:2014 + A13 :2017
EN 60335 - 2- 24 :2010

Erklärung:

Hiermit erklären wir, dass die oben genannten Produkte sowie in den von uns in Verkehr gebrachten Ausführungen bei bestimmungsgemäßer Verwendung mit den Lebensmitteln Trinkwasser, Sodawasser und Getränkesyrups aufgrund ihrer Bauart den einschlägigen, grundlegenden Anforderungen der EU/EG-Richtlinien entsprechen
Des weiteren erklären wir, dass die in Serie gebauten Geräte dem geprüften Baumuster entsprechen.

Declaration:

Herewith we certify that all above listed products and their variants, which are placed on the markets comply with the relevant basic requirements of the EU/EC regulations, provided that the products are used for the handling of potable water, soda water and beverage syrups according to their design and purpose as marked by our company.

Furthermore, we certify the units manufactured in series comply with the approved prototype.

Langenfeld, den / Dated, Langenfeld 22.08.2019

i.V.
D. Engelen
Leitung Qualitätsmanagement Europa
European quality manager

i.A.
T. Zöllner
Leitung Entwicklung Soft Drinks
Engineering Manager Soft Drinks

Bankverbindung
ING-Bank
IBAN: DE35 5002 1000 0010 1385 35
SWIFT-BIC: INGBDEFFXXX
UST.-ID.-Nr.: DE811142805
Steuer Nr.: 135/5713/2092

Sitz der Gesellschaft: Langenfeld
Amtsgericht Düsseldorf HRB 45002
WEEE-Reg.-Nr. DE 26128839
Geschäftsführer: Jens Sturies

A Marmon/Berkshire Hathaway Company

7.2 Handover certificate

1. Name of the place of operation

(Name of the place of operation)

(Street address, house no.)

(Postcode, town)

(Name of the operator)

2. Operator copy

The operator has been instructed in the use of the unit.
The unit has been handed over to the operator in good working order and in a condition that is clean and safe to operate.

Date	Stamp and signature Operator	Stamp and signature Installer of the unit

3. Installer copy

The operator has been instructed in the use of the unit.
The unit has been handed over to the operator in good working order and in a condition that is clean and safe to operate.

Date	Stamp and signature Operator	Stamp and signature Installer of the unit

4. Evidence of instruction

I hereby confirm that on _____ (date) I was instructed on the following topics:

- ☐ General sequence of operations
- ☐ Reference to existing documentation
- ☐ Cleaning the unit

Last name/first name	Signature
Last name/first name	Signature
Last name/first name	Signature
Last name/first name	Signature
Last name/first name	Signature
Last name/first name	Signature
Last name/first name	Signature
Last name/first name	Signature
Last name/first name	Signature
Last name/first name	Signature

5. Evidence of cleaning

Date	Component	Chemical agent		Cleaning agent	Carried out by	Signature
		alkaline	acidic			

www.cornelius-emea.com Cornelius Deutschland GmbH
Carl-Leverkus-Str. 15
40764 Langenfeld
Germany

Tel.: +49 (0) 21 73 / 79 3 – 0
Fax: +49 (0) 21 73 / 77 4 – 38
E-Mail: info@cornelius.com